Parts Manual

Model 35D Carton Clamp

Serial Number 35D-CCS-277

cascade® corporation

For Technical Assistance call: 800-227-2233, Fax: 888-329-8207
To Order Parts call: 888-227-2233, Fax: 888-329-0234
OR
Write: Cascade Corporation, P.O. Box 20187, Portland, OR 97220
Internet: www.cascorp.com

Safety Decals

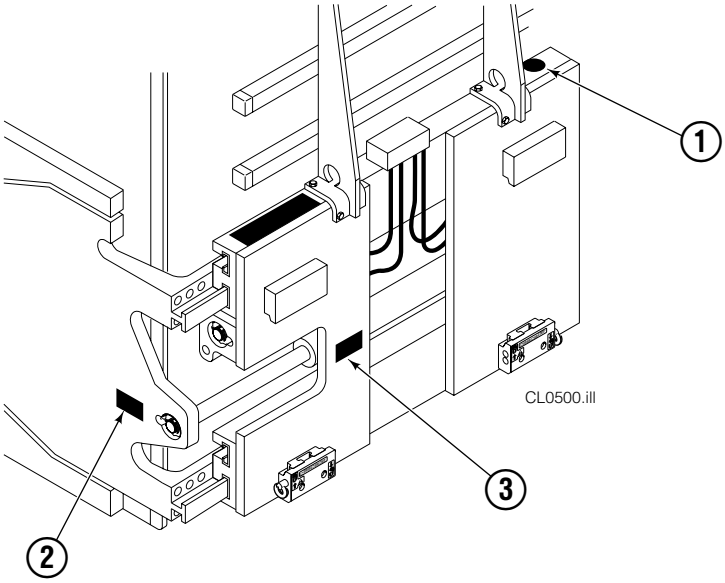

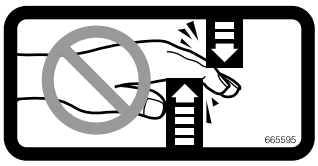

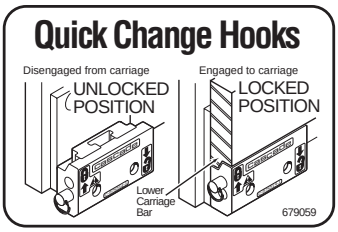

REF	QTY	PART NO.	DESCRIPTION
1	1	679150	No Step Decal
2	2	665595	No Hand Hold Decal
3	1	679059	Quick Change Hook Decal

Publications

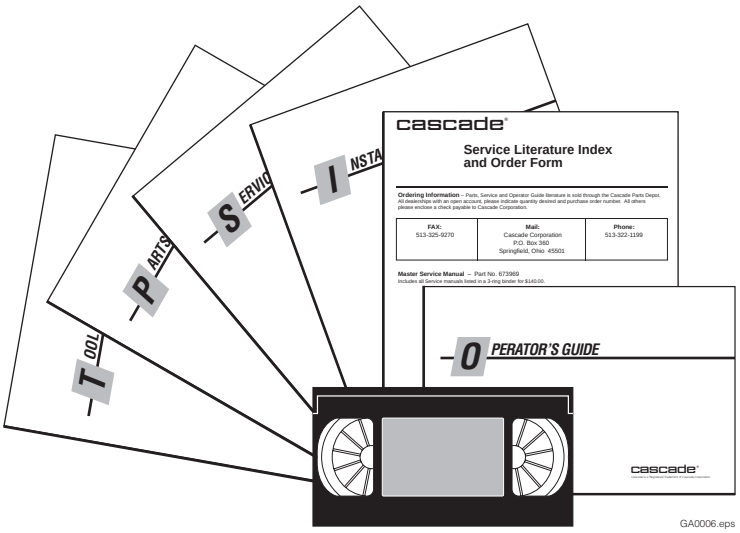

PART NO.	DESCRIPTION
670487	Service Manual
670834	Operators Guide
670488	Installation Instructions
680664	Servicing Cascade Cylinders-VHS
679929	Tool Catalog
673964	Literature Index Order Form

Base Unit Group

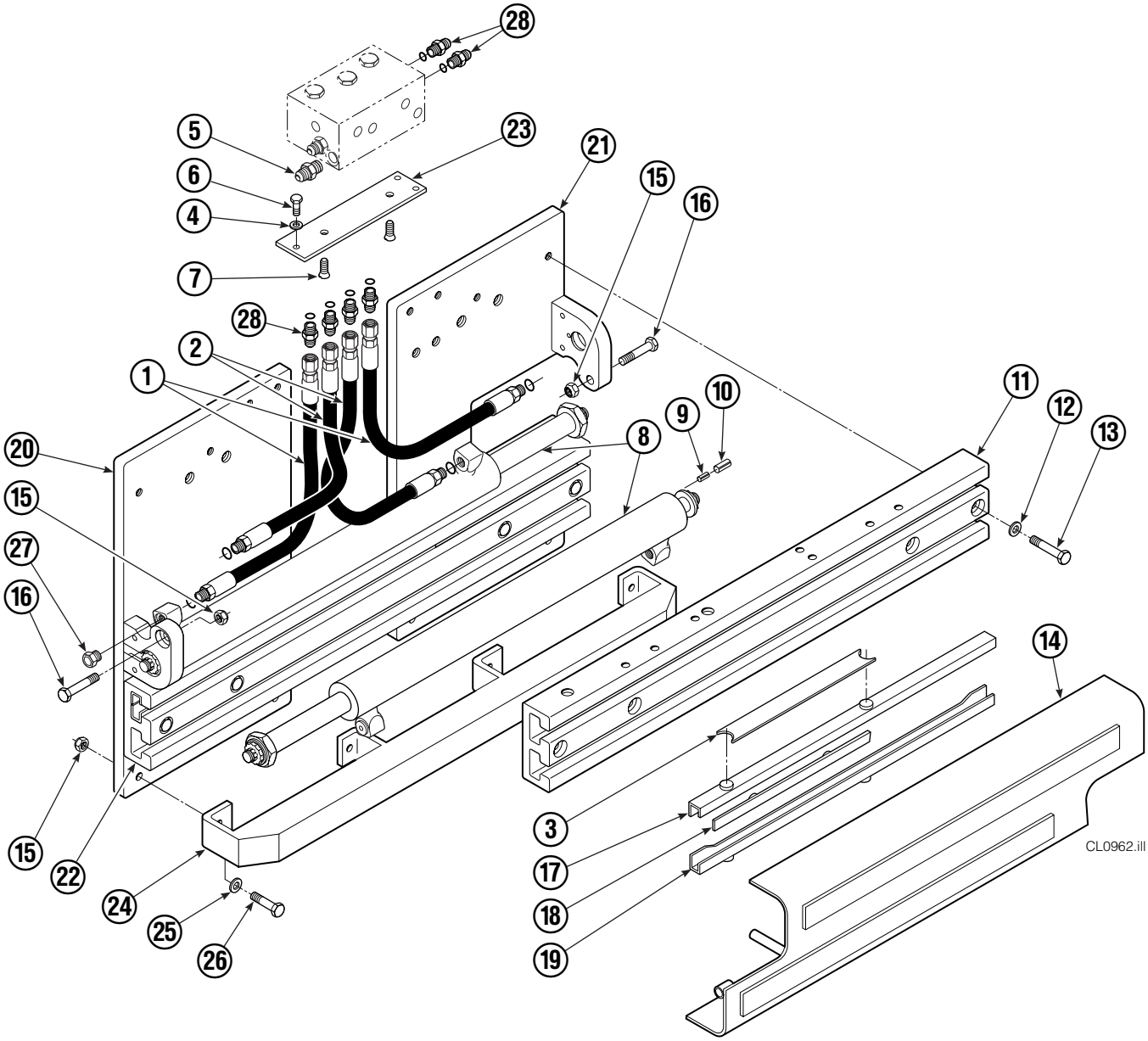

35D							
REF	QTY	PART NO.	DESCRIPTION	REF	QTY	PART NO.	DESCRIPTION
1	2	210436	Hose, 24.75 in.	15	6	773842	Nut, M12
2	2	210449	Hose, 18.25 in.	16	2	768414	Capscrew, M12x65
3	1	675326	Shim Kit ■	17	4	208858	Bearing
4	2	209021	Washer, M10	18	4	667663	Bearing
5	1	601377	Fitting, 8-8	19	4	208857	Bearing
6	2	684594	Capscrew, M10x20	20	1	220996	Mounting Plate - RH
7	2	766646	Capscrew, M10x20	21	1	220997	Mounting Plate - LH
8	2	671573	Cylinder ▲	22	1	221417	Frame - Lower
9	2	768953	Roll Pin - Inner	23	1	669957	Plate
10	2	769009	Roll Pin - Outer	24	1	671545	Bumper - Lower
11	1	221280	Frame - Upper	25	4	202348	Washer, M12
12	8	667910	Washer	26	4	768556	Capscrew, M12x45
13	8	684659	Capscrew, M12x75	27	2	602580	Fitting, 8
14	1	672331	Bumper	28	6	611288	Fitting, 6-8

■ Includes two .015 in. Shims, and eight .020 in. Shims.

▲ See Cylinder page for parts breakdown.

Reference: Base Unit 221353, SK-6390 R-3.

Cylinder

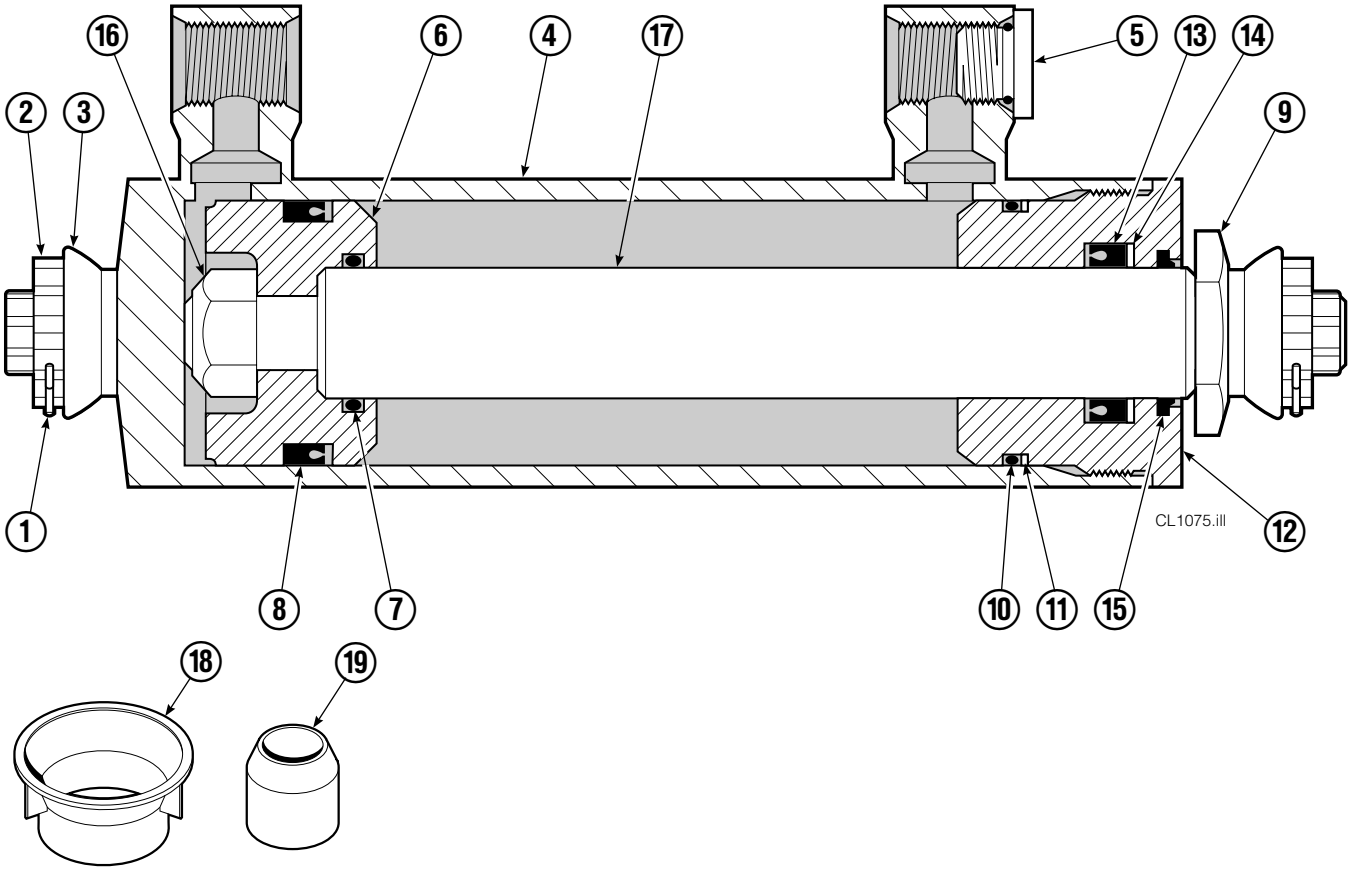

35D			
REF	QTY	PART NO.	DESCRIPTION
		671573	Cylinder Assembly
1	2	6510	Cotter Pin ■
2	2	667624	Nut Retainer ■
3	2	667625	Nut ■
4	1	671574	Shell
5	1	602580	Fitting
6	1	558400	Piston
7	1	2716	O-Ring ▲
8	1	662454	Seal ▲
9	1	667626	Washer
10	1	2787	O-Ring ▲
11	1	615130	Back-Up Ring ▲
12	1	667917	Retainer
13	1	662448	Seal ▲
14	1	638243	Nylon Ring ▲
15	1	636853	Wiper ▲
16	1	668031	Nut
17	1	671571	Rod
18	1	671049	Seal Loader, Piston ▲
19	1	671052	Seal Loader, Retainer ▲
		667995	Service Kit

▲ Included in Service Kit 667995.

■ Included in Nut Service Kit 668926.

Reference: S-7662.

Check Valve

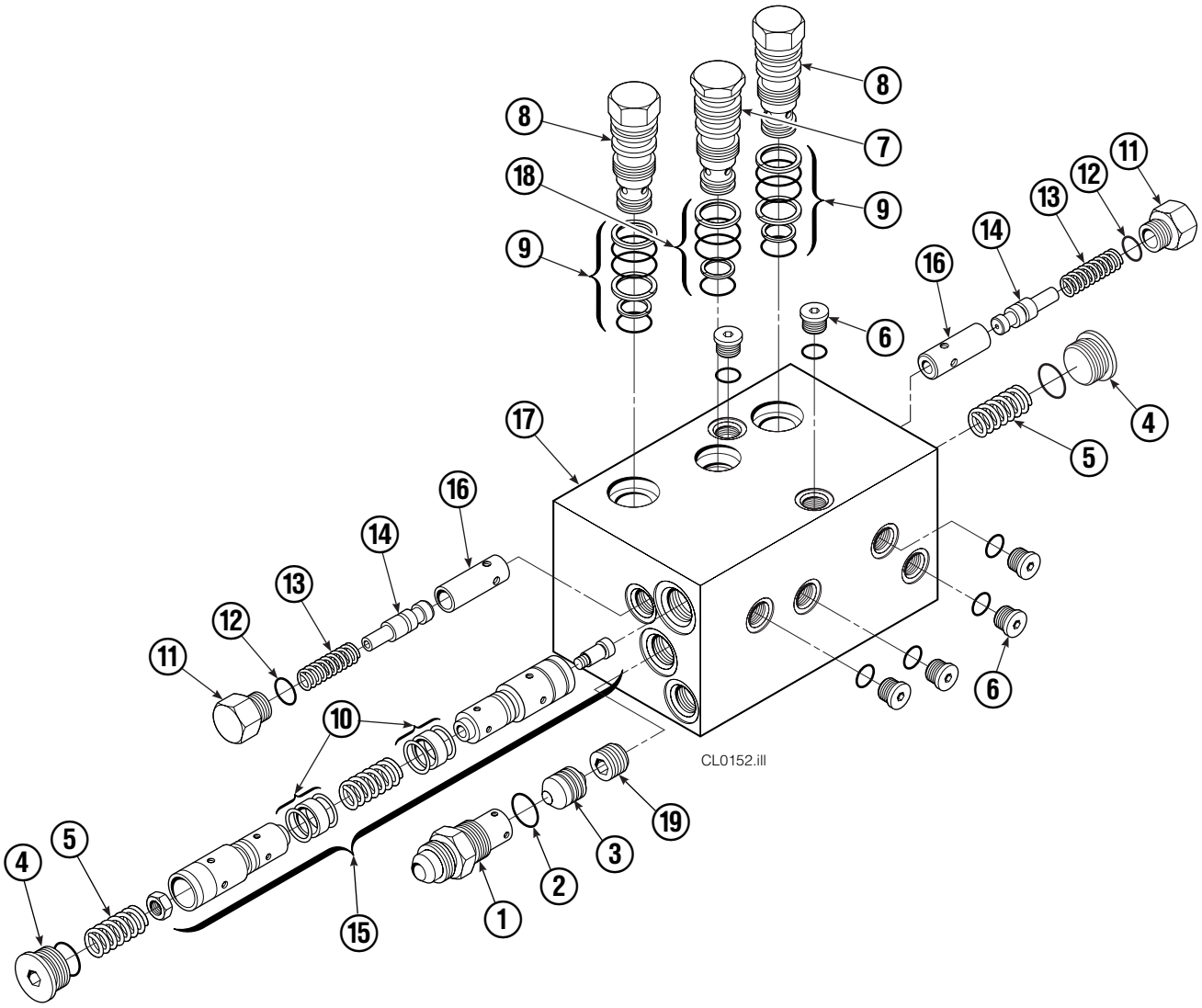

REF	QTY	PART NO.	DESCRIPTION	REF	QTY	PART NO.	DESCRIPTION
		669762	Check Valve – Flow Divider	11	2	667494	Fitting
1	1	667490	Special Fitting	12	2	2840	O-Ring ●
2	1	2841	O-Ring ●	13	2	673098	Spring
3	1	667471	Spool	14	2	667492	Poppet
4	2	609453	Fitting, 10	15	1	673089	Spool Assembly
5	2	667487	Spring	16	2	667491	Sleeve
6	6	604510	Fitting, 6	17	1	669763	Valve Body
7	1	678270	Check Valve – VPO	18	1	661347	Service Kit ●
8	2	659058	Check Valve – PO	19	1	676343	Regeneration Elimination Plug ■
9	2	667516	Service Kit ●			667513	Service Kit
10	1	679846	Low Flow Spool Kit				

● Included in Service Kit 667513.

■ For eliminating regeneration circuit only. See Tech. Bulletin 121.

Reference: SK-5302.

Arms and Pads

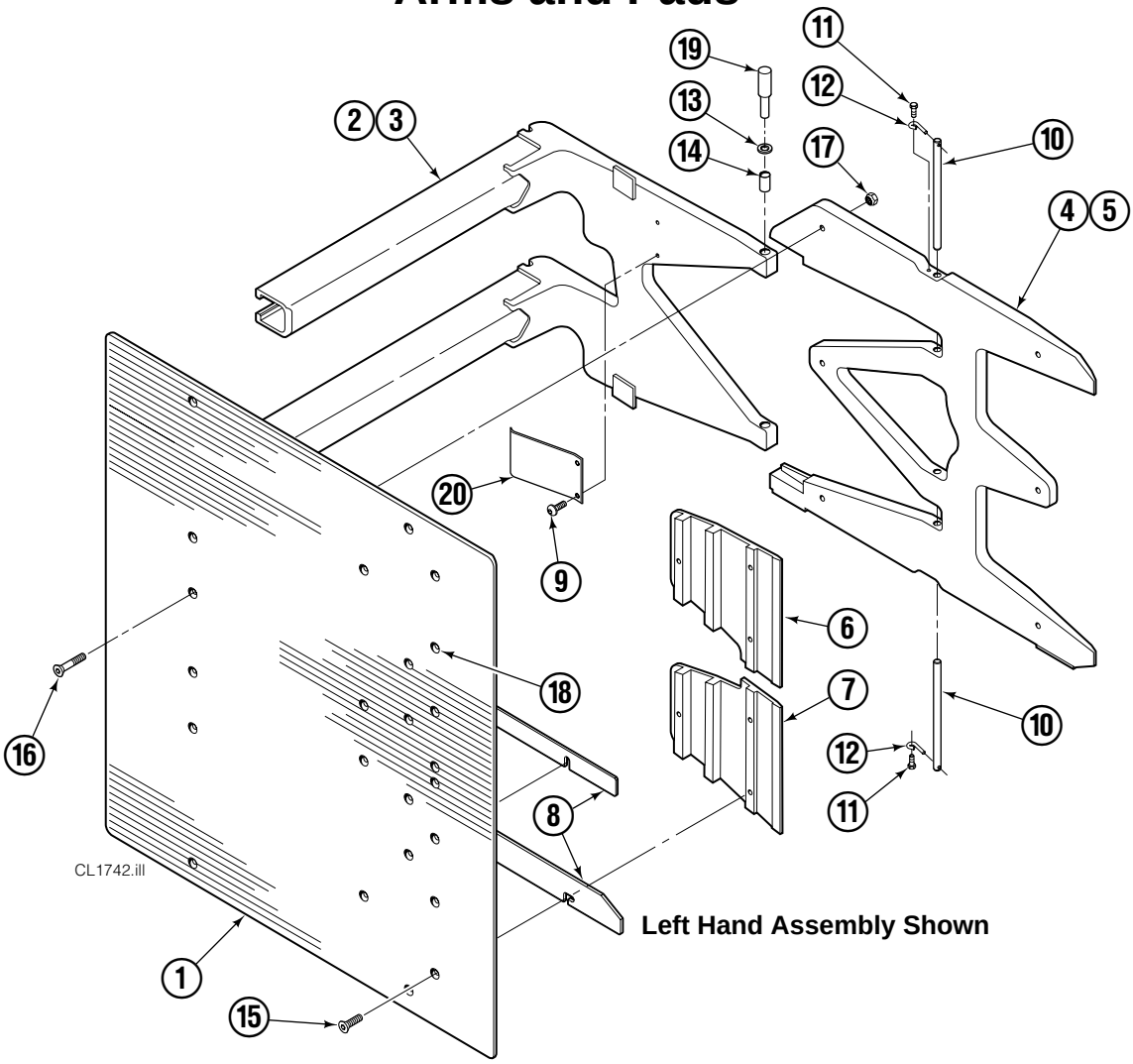

Left Hand Assembly Shown

30E			
		CONTACT PAD WIDTH	
REF	QTY	60 in. (1524 mm)	DESCRIPTION
1	2	3011365	Contact Pad – 1524 x 1524 mm
2	1	3012120	Arm – LH
3	1	3012121	Arm – RH
4	1	393839	Stabilizer – LH
5	1	393856	Stabilizer – RH
6	2	210180	Filler Block – LH Upper/RH Lower
7	2	210179	Filler Block – LH Lower/RH Upper
8	1	3001731	Shim Kit

Common Parts

REF	QTY	PART NO.	DESCRIPTION	REF	QTY	PART NO.	DESCRIPTION
9	4	203405	Capscrew, M10 x 16	15	12	766646	Capscrew, M10 x 20
10	4	210161	Pin	16	12	768706	Capscrew, M12 x 35
11	4	787372	Capscrew, M8 x 20	17	12	221409	Nut, M12
12	4	682999	Eye Pin	18	▲	673841	Contact Pad Repair Kit
13	8	675620	Washer, M10	19	1	675626	Bushing Driver Tool
14	8	200590	Bushing	20	2	210154	Spring

S-4246, Stabilizer Group 393822.
Common Parts 210495.

▲ Repairs one hole.

Backrest Group

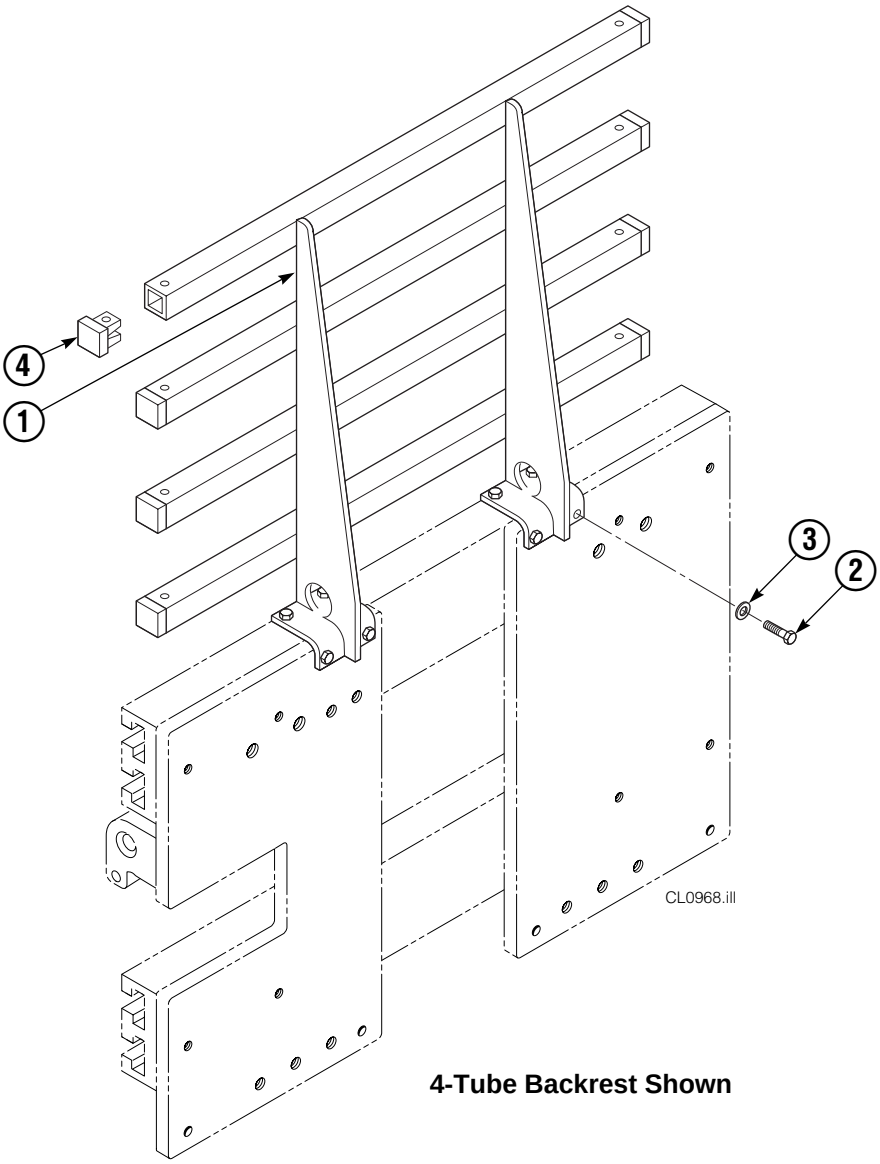

4-Tube Backrest Shown

25D			
REF	**QTY**	**PART NO.**	**DESCRIPTION**
		221579	Backrest Group
1	1	669899	Backrest
2	8	768810	Capscrew, M10x30
3	8	667910	Washer, M10
4	12	674356	Tube End

Reference: SK-6390.

Quick-Change Mounting Group

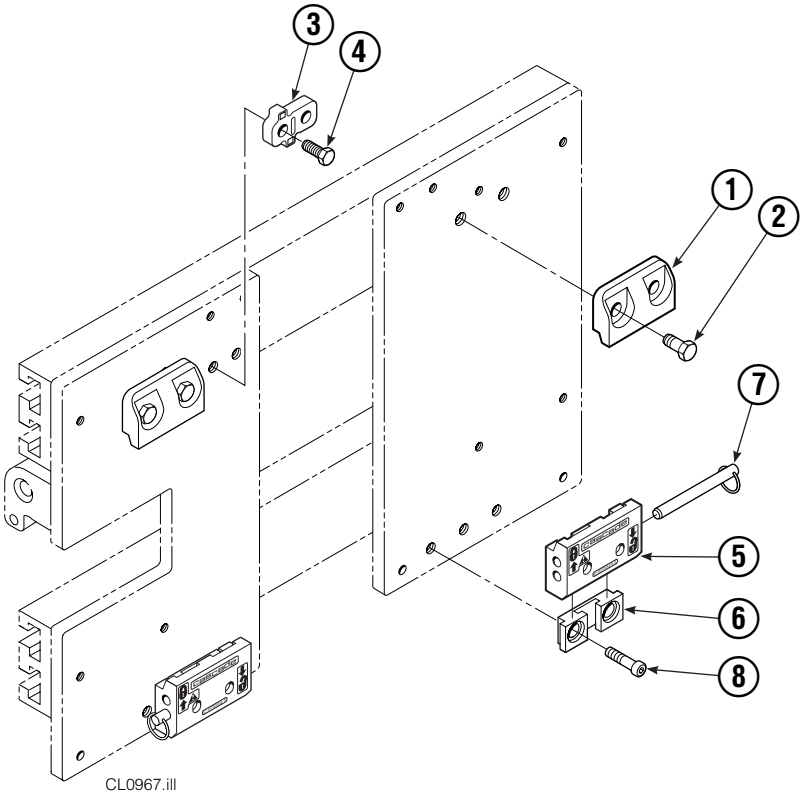

REF	QTY	ITA II PART NO.	DESCRIPTION
		211162	Upper Mounting Group ▲
		211174	Lower Mounting Group ●
1	2	210491	Upper Hook
2	4	768577	Capscrew, M20 x 35
3	1	212999	Center Key
4	2	211129	Capscrew, M16 x 35
5	2	675514	Lower Hook
6	2	675515	Guide
7	2	678832	Pin
8	4	211180	Capscrew, M16 x 30

▲ Includes items 1–4.

● Includes items 5–8.

Reference: SK-6390.

PARTS ORDERING LOG

DATE	PURCHASE ORDER	SERIAL NUMBER	PAGE	REF NO.	QTY	CASCADE PART NO.	CUSTOMER PART NO.	DESCRIPTION	PRICE

Do you have questions you need answered right now? Call your nearest Cascade Parts Department.
Visit us online at www.cascorp.com

Cascade Corporation
2501 Sheridan Avenue
Springfield, OH 45505
Tel: 888-CASCADE (227-2233)
FAX: 888-329-0234

Cascade Canada Inc.
5570 Timberlea Blvd.
Mississauga, Ontario
Canada L4W-4M6
Tel: 905-629-7777
FAX: 905-629-7785

Cascade GmbH
D-41199 Monchengladbach
Klosterhofweg 52
Germany
Tel: 49-216-668230
FAX: 49-216-6682323

Cascade Finland
Albert Petreliuksenkatu 3
01370 Vantaa
Finland
Tel: 358-9-836-1925
FAX: 358-9-836-1935

Cascade N.V.
European Headquarters
P.O. Box 3009
1300 El Almere
Damsluisweg 56
1332 ED Almere
The Netherlands
Tel: 31-36-5492911
FAX: 31-36-5492964

Cascade N.V.
Benelux Sales and Service
P.O. Box 3009
1300 El Almere
Damsluisweg 56
1332 ED Almere
The Netherlands
Tel: 31-36-5492950
FAX: 31-36-5492974

Cascade (UK) Ltd.
15, Orgreave Crescent
Dore House Industrial Estate
Handsworth
Sheffield S13 9NQ
England
Tel: 742-697524
FAX: 742-695121

Cascade Scandinavia AB
Box 124
Hammarvägen 10
567 23 Vaggeryd
Sweden
Tel: 42-0-393-36950
FAX: 46-0-393-36959

Cascade Norway
Østerliveien 37A
1153 Oslo
Norway
Tel: 47-22-743160
FAX: 47-22-743157

Cascade France S.A.R.L.
1D Rue De Charaintru
BP 18, 91360 Epinay-Sur-Orge
Morangis Cedex, France
Tel: 33-1- 64547500
FAX: 33-1-64547501

Cascade Hispania S.A.
Carrer 5 Sector C
Zona Franca Duanera
Poligono de la Zon Franca
08040 Barcelona, Spain
Office No. 256
Tel: 93-264-07-30
FAX: 93-264-07-31

Cascade Japan Ltd.
5-5-41,
Torikai Kami
Settsu, Osaka
Japan, 566
Tel: 81-726-53-3490
FAX: 81-726-53-3497

Cascade Korea
108B, Namdong Ind Complex
658-3 Gojan-Dong
Namdong-Gu
Inchon, 405-310 Korea
Tel: 82-32-821-2051
FAX: 82-32-821-2055

Cascade Australia
1445 Ipswich Road
Rocklea, QLD 4106
Australia
Tel: 1-800227-223
FAX: (07) 3373-7333

Cascade New Zealand
15 Ra Ora Drive
East Tamaki, Auckland
New Zealand
Tel: 9-273-9136
FAX: 9-273-9137

Cascade (Africa) Pty. Ltd.
P.O. Box 625, Isando 1600
60A Steel Road
Sparton, Kempton Park
South Africa
Tel: 27-11-975-9240
FAX: 27-11-394-1147

Cascade-Xiamen
No. 668 Yangguang Rd.
Xinyang Industrial Zone
Haicang, Xiamen City
Fujian Province
P.R. China 361026
Tel: 86-592-651-2500
FAX: 86-592-651-2571

Cascade (Singapore)
Trading Co.
Four Seasons Park
Autumn Block - Apt. 1802
12 Cuscaden Walk
Singapore
Tel: 65-834-1935
FAX: 65-834-1936

cascade™

© Cascade Corporation 2002

8-2002