The secure way to handle unstable palletized loads.

All-purpose attachments for securing unstable loads for transportation.

APPLICATIONS

Designed for transporting unstable loads such as soft drinks, malted beverages, bottled water and empty containers, Load Stabilizers allow faster operating speeds and more efficient handling procedures by securing the palletized load. They are particularly valuable in outdoor operations and facilities with rough floors. E-Series Load Stabilizers have a net capacity of 3,500 lbs. and are available with a wide range of pad sizes, arm configurations and backrest styles.

MODELS

- Standard
- Bottled Water

FEATURES

- Excellent driver visibility
- Narrow frame width
- Frame fits between forks
- Thin arm pad profile
- Highly competitive rating specifications
- Internal relief valve
- Carriage compatibility

cascade EUROPE

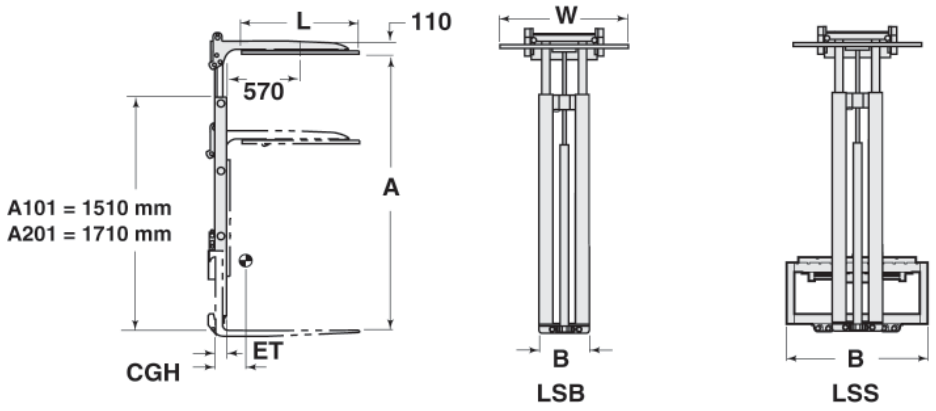

Model	Capacity at load centre kg/mm	Sideshift stroke (mm)	Opening Range A (mm)	Contact pad width x length W x L (mm)	Frame width B (mm)	Effective thickness ET (mm)	Centre of gravity CGH (mm)	Mass kg	Mounting class ISO 2328
Non-Sideshifting Load Stabilizers									
35E-LSB-A101	1590@600	—	1070-2070	800x1000	330	75	228	178	2A
35E-LSB-A201	1590@600	—	1270-2470	800x1000	330	75	213	192	2A
Sideshifting Load Stabilizers									
35E-LSS-A101	1590@600	200	1070-2070	800x1000	800	125	226	236	2A
35E-LSS-A201	1590@600	200	1270-2470	800x1000	800	125	218	250	2A
35E-LSS-A102	1590@600	200	1070-2070	800x1000	900	125	218	245	2A
35E-LSS-A202	1590@600	200	1270-2470	800x1000	900	125	211	259	2A
35E-LSS-A103	1590@600	200	1070-2070	800x1000	1100	125	212	254	2A
35E-LSS-A203	1590@600	200	1270-2470	800x1000	1100	125	205	268	2A

HYDRAULIC FLOW (L.Min.)/HYDRAULIC FUNCTIONS

Model	Min. Flow	Recommended Flow	Max. Flow	Max. Pressure (bar)	Hydraulic Functions	Truck Aux. Valves Required
35E-LSB	19	30	38	159	1	1
35E-LSS	19	30	38	159	2	2

Cascade (UK) Ltd • 3 Kelbrook Road • Parkhouse Industrial Estate • Openshaw • Manchester M11 2DD • England • Tel. (free phone) 0800 243015 • Fax. +44-(0)161 438 4055
Cascade European Headquarters • Via Dell'Artigianato 1 • 37050 Vago di Lavagno (VR) • Italy • Tel. +39-045-8989111 • Fax +39-045-8989160

Cascade is a registered trademark of Cascade Corporation.
© Cascade Corporation 2010. All rights reserved.

cascade EUROPE

www.cascorp.com