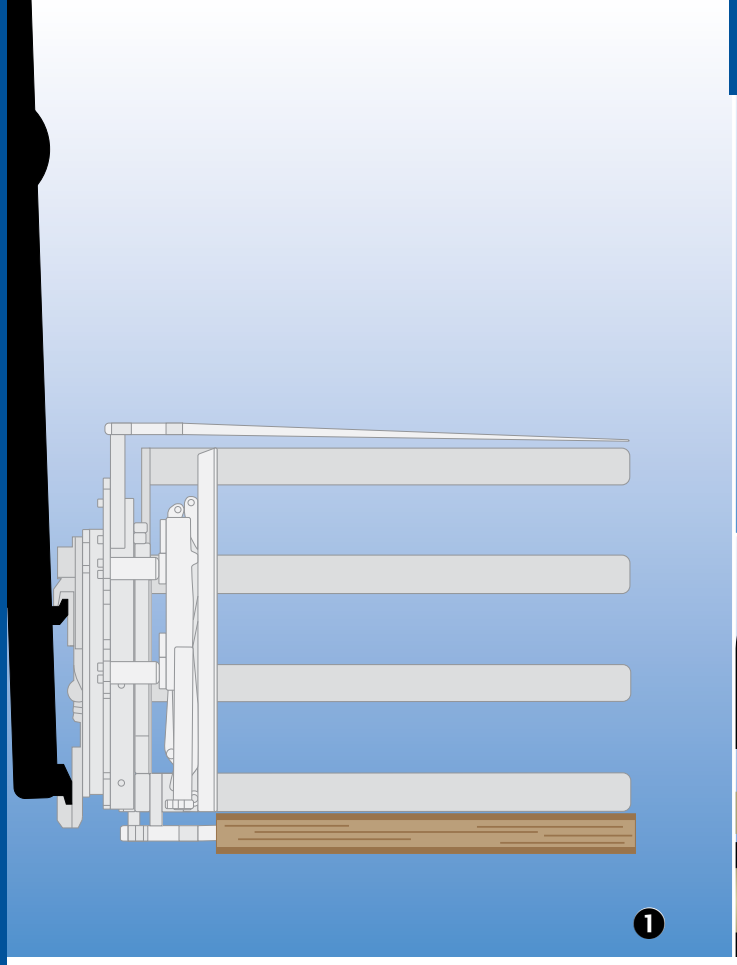

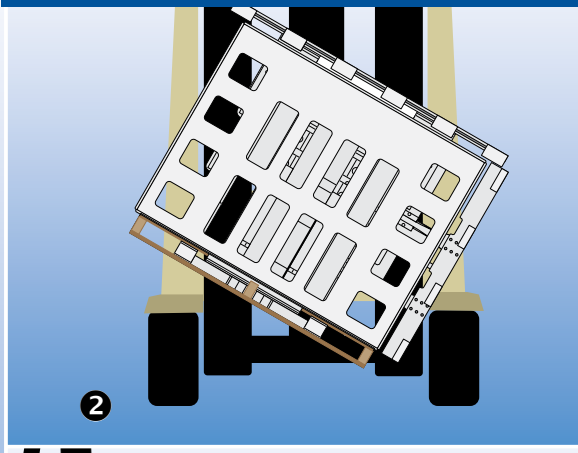

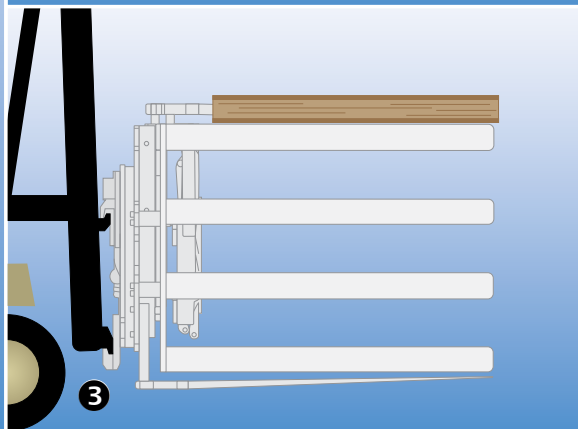

Retain your pallets in-house, and reduce your total pallet inventory.

The ability to clamp, rotate, and push your product.

APPLICATIONS

Cascade's Inverta Push may be used in nearly every operation that ships unit loads of bags or cartons, such as fertilizer, grain, cement, mail, sugar, canned goods, boxed goods, glass and plastic.

FEATURES

- ***Retrieving your pallets with an Inverta Push***
  The Inverta Push enables you to warehouse your products on in-house, 'captive' pallets. For shipping, the Inverta Push places the load on a slip-sheet, customer pallet or directly on the transit vehicle floor, then retrieves your pallet.Your pallets need never leave the warehouse.
- ***Retaining your expensive pallets in-house eliminates the need to dead-head pallets after unloading at the destination.***
  The receiver has no return costs to pay and you can reduce your total pallet inventory. The Inverta Push consists of two opposing sets of forks for clamping, an automatically sequenced stabilizer arm on the side with forks, an integral sideshifter, a rotator to invert or rotate the load and a push plate for push-off load deposit.

HOW IT WORKS

❶ Bottom forks are inserted in pallet. Load is clamped against upper forks. Side stabilizer engages load to secure it for rotation.

❷ As truck moves to load-out point, Inverta Push turns 180° so pallet is on top of load. Slipsheet or customer pallet (if used) is now on bottom.

❸ Forks lift pallet off load. Operator pushes off and backs away simultaneously.

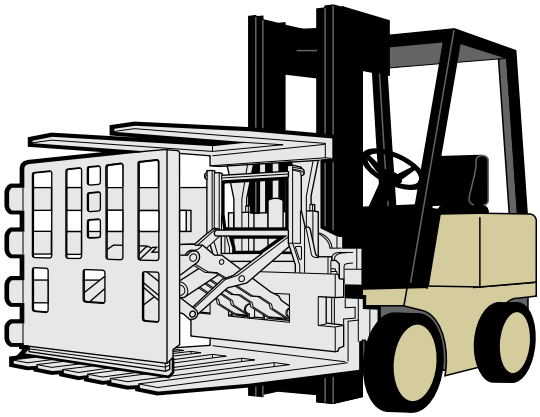

cascade EUROPE

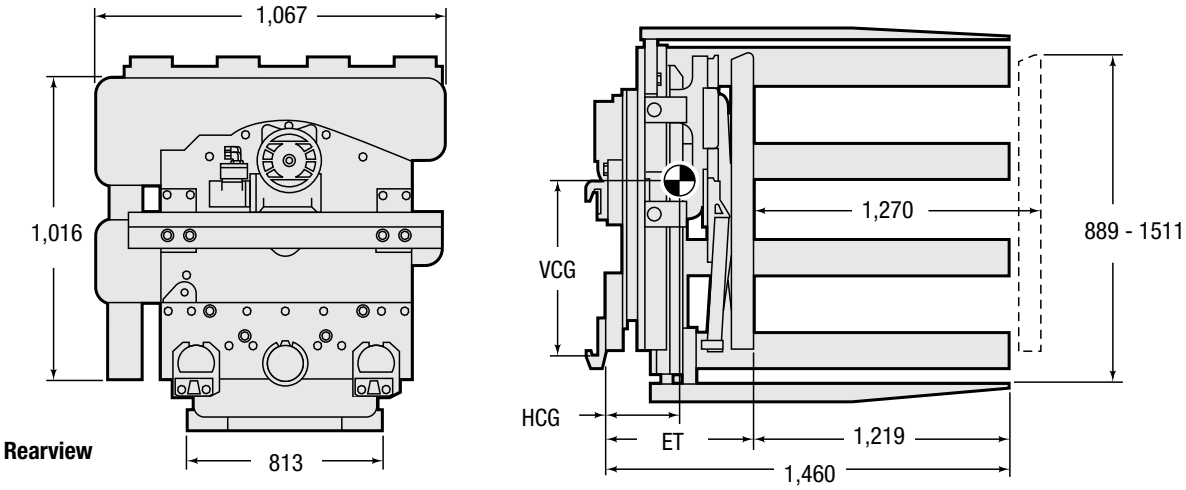

Catalog Order No.	Capacity @ 24" (600 mm) Load Center	Arm Length	Mtg. Class	Mounting Angle	Hydraulic Functions ①	Weight	Effective Thickness	Horizontal Ctr. of Gravity	Vertical Ctr. of Gravity
	kg	mm				kg	ET	HCG	VCG
45E-IVP	1,815	1,219	3	0°	4	1,362	508	376	457

① This base unit is equipped with solenoids and may be controlled with either one or two auxiliary valves on the truck. **IMPORTANT:** Solenoid voltage must match truck voltage. Please specify truck voltage when ordering.

- A push/pull model is also available. Consult Cascade.
- Modifications of type, size, mounting, spread of arms and opening and closing ranges are available. Consult Cascade.
- Worksheet required at time of order.

Hydraulic Flow

Minimum	Recommended	Maximum	Maximum Pressure
19 LPM	26 LPM	38 LPM	159 bar

Installation Kit

Catalog Order No.
685559

OPTIONS

- Load push/pull mechanism
- Various opening and closing ranges
- Various types, sizes and spreads of arms
- Class 2 and 4 mounting

Cascade (UK) Ltd • 3 Kelbrook Road • Parkhouse Industrial Estate • Openshaw • Manchester M11 2DD • England • Tel. (free phone) 0800 243015 • Fax. +44-(0)161 438 4055
Cascade European Headquarters • Via Dell'Artigianato 1 • 37050 Vago di Lavagno (VR) • Italy • Tel. +39-045-8989111 • Fax +39-045-8989160

Cascade is a registered trademark of Cascade Corporation.
© Cascade Corporation 2011. All rights reserved.